GENERAL ARRANGEMENT

SCALE : 1/200

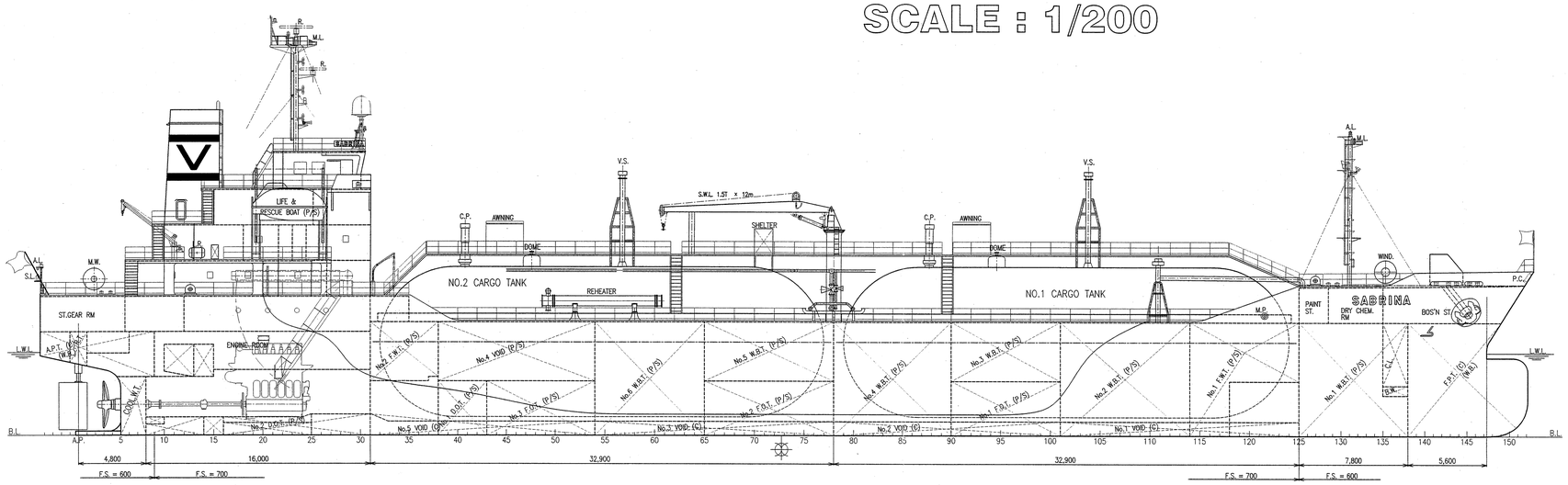

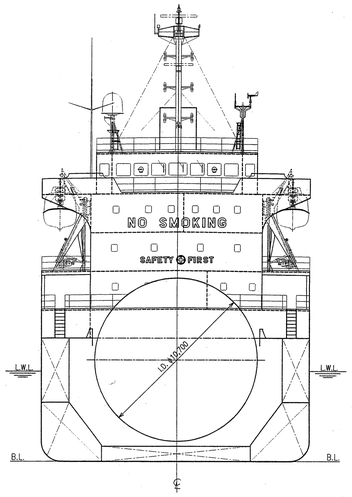

POOP DECK

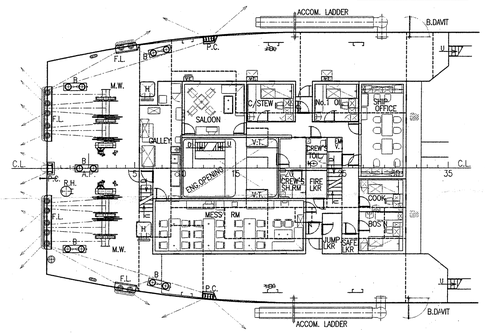

BOAT DECK

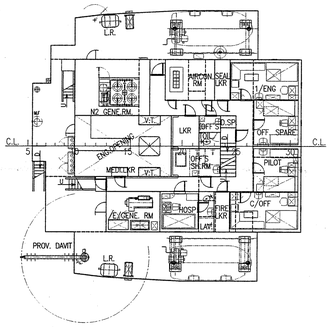

BRIDGE DECK

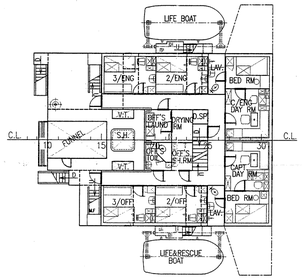

NAV. BRI. DECK

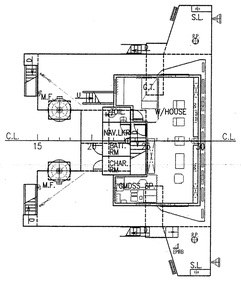

F'CLE DECK

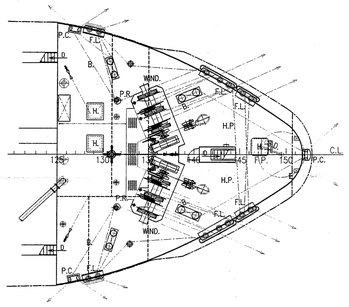

COMPASS DECK

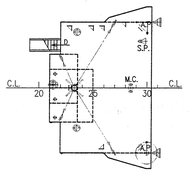

UPPER DECK

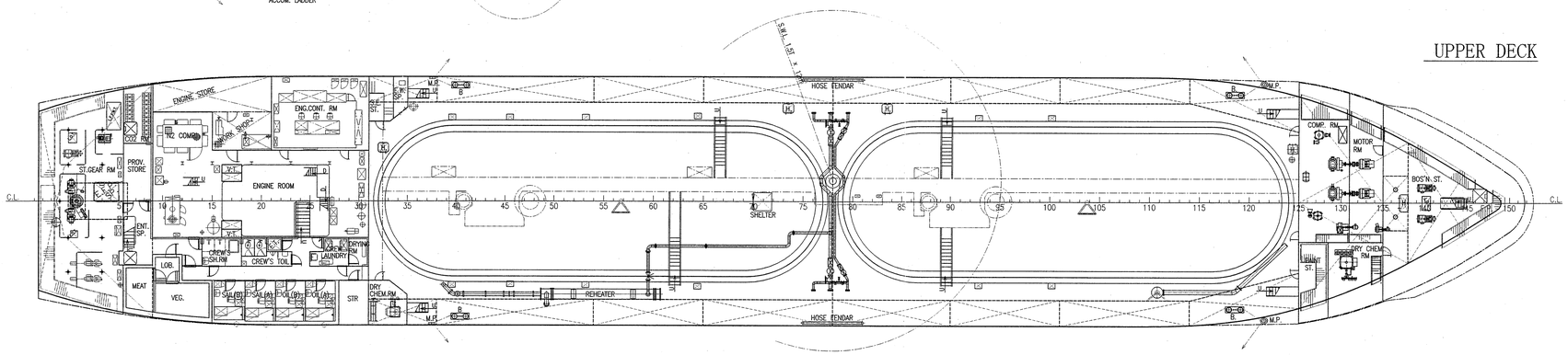

HOLD

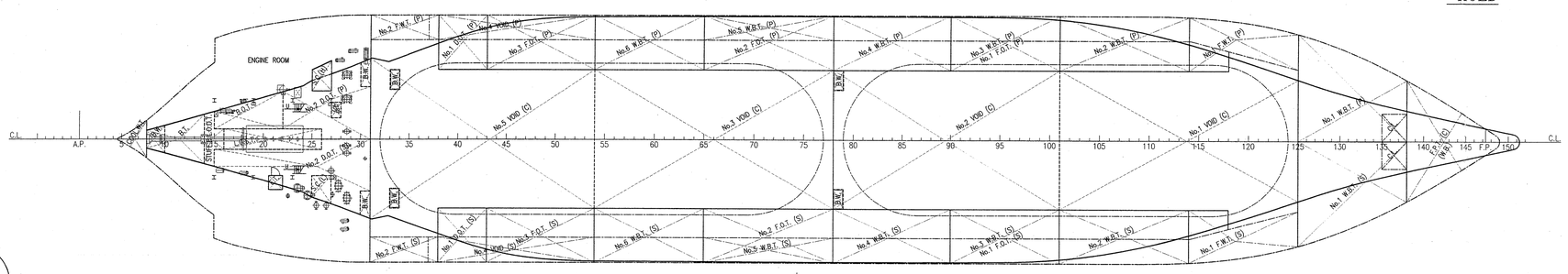

ENGINE FLAT

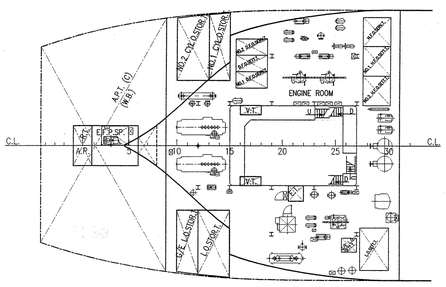

PRINCIPAL PARTICULARS

LENGTH (O.A.)	106.00 M
LENGTH (B.P.)	100.00 M
BREADTH (MLD.)	17.60 M
DEPTH (MLD.)	8.10 M
DRAFT (SUMMER) (EXT.)	5.964 M
GROSS TONNAGE	4,484 T
DEADWEIGHT (SUMMER)	5,359.99 MT
CARGO TANK CAPACITY	5,019.117 M3
MAIN ENGINE	6UEC33LS II
	3,400KW (4,620PS) × 215rpm × 1set
COMPLEMENT	18P
CLASS / FLAG	NK / HONG KONG

BIBLIOGRAPHY

14th, Sep. 2006	Drawing by our shipyard.
6th, Aug. 2008	1st Rev.
13rd, Nov. 2008	(For Reference)
16th, Mar. 2009	Final Plan.

5,000 CBM. PRESSURIZED LPG/VCM CARRIER

SHIP NAME	SABRINA

GENERAL ARRANGEMENT

FINAL PLAN

SHIP No.	7036
SCALE	1/200

SHITANOE
SHIPBUILDING CO., LTD.
DESIGNING DEPARTMENT

MANAGER	M. Tomita
SECT. CHIEF	S. Maki
CHECKER	I. M.
DRAWER	S. Miura
DRAWN DATE	13th, September 2006
DRAWING No.	GH - 1000